Cambridge Assessment International Education
Cambridge International General Certificate of Secondary Education

CANDIDATE NAME	

CENTRE NUMBER						CANDIDATE NUMBER					

DESIGN AND TECHNOLOGY **0445/41**

Paper 4 Systems and Control **October/November 2019**

1 hour

Candidates answer on the Question Paper.

No Additional Materials are required.

READ THESE INSTRUCTIONS FIRST

Write your centre number, candidate number and name on all the work you hand in.
Write in dark blue or black pen.
You may use an HB pencil for any diagrams or graphs.
Do not use staples, paper clips, glue or correction fluid.
DO **NOT** WRITE IN ANY BARCODES.

Section A
Answer **all** questions in this section.

Section B
Answer **one** question in this section.

You may use a calculator.

At the end of the examination, fasten all your work securely together.
The number of marks is given in brackets [ ] at the end of each question or part question.
The total of the marks for this paper is 50.

This document consists of **17** printed pages and **3** blank pages.

DC (LB) 186238
© UCLES 2019

Cambridge Assessment International Education

Section A

Answer **all** questions in this section.

1 Models are often used when designing a structure.
Models can be manufactured or they can be computer generated.

(a) Give **two** benefits of using a manufactured model.

1 .....

2 .....
[2]

(b) Give **two** benefits of using a computer generated model.

1 .....

2 .....
[2]

(c) State **one** other use for a computer in manufacturing.

..... [1]

2 Explain what is meant by equilibrium in a structure.

.....

.....

..... [2]

3 State the meaning of the term ‘moment’ in a structure.

..... [1]

© UCLES 2019

4 Fig. 1 shows a mechanism used to manually operate a railway signal.

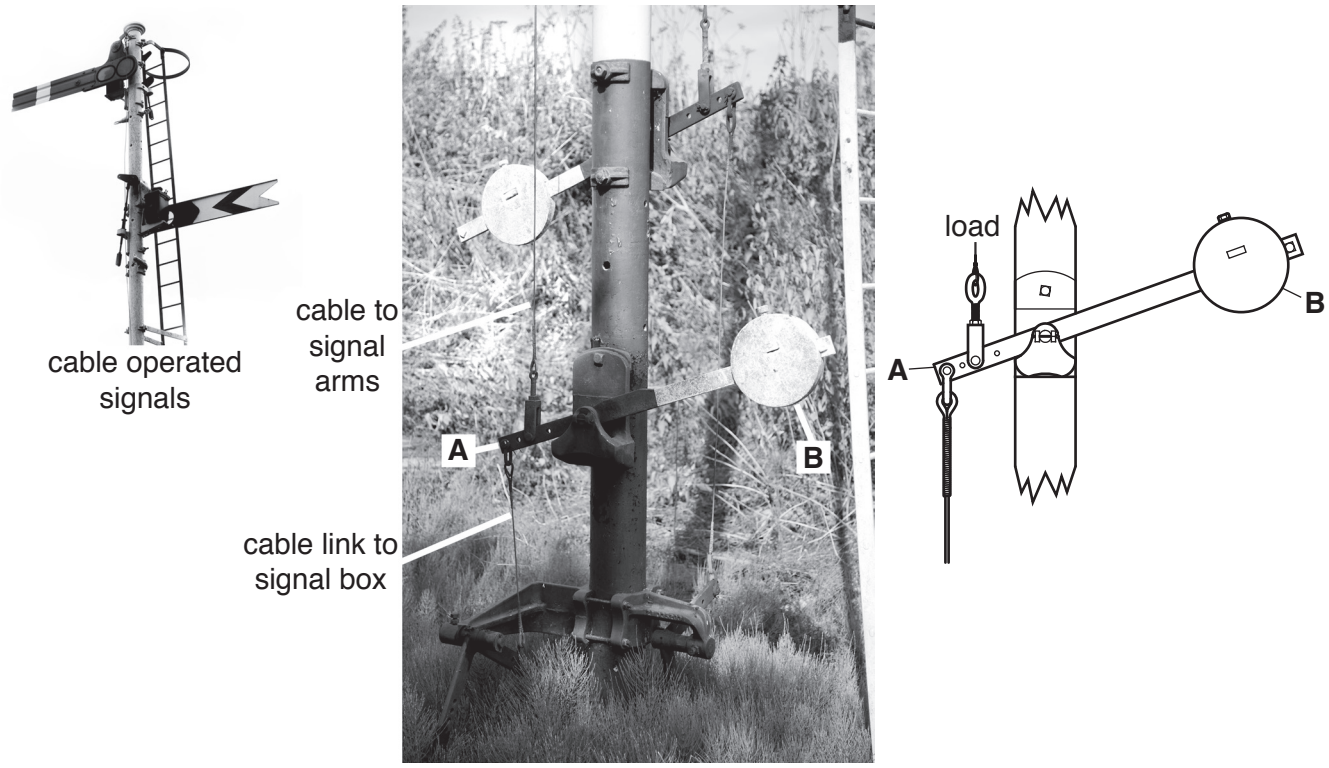

Fig. 1

(a) The cable link is operated by a lever in a signal box.

(i) State the order of lever used at **A**.

..... [1]

(ii) Name the force acting in the cable when the signal is operated.

..... [1]

(iii) Describe the purpose of counterbalance **B**.

.....

.....

..... [2]

(b) Give **two** reasons why modern signalling systems are electronic rather than mechanical.

1 .....

2 .....
[2]

5 Fig. 2 shows two eccentrics on a locomotive axle.

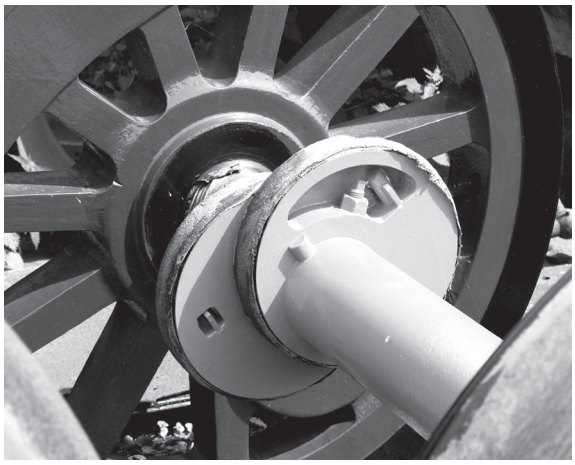

Fig. 2

(a) Give the conversion of motion produced by an eccentric.

..... to ..... [2]

(b) Name **one** other mechanism that will produce the same conversion of motion.

..... [1]

6 **(a)** Identify **two** health and safety risks that are present when soldering components to a circuit board.

1 .....

2 .....
[2]

(b) For **one** of the risks identified, describe the precautions taken and how the risk is reduced.

.....

.....

.....

..... [2]

7 Name **one** instrument used to measure electrical resistance.

..... [1]

© UCLES 2019

8 **(a)** Explain what is meant by tolerance in a fixed resistor.

.....

.....

..... [2]

(b) State how the tolerance is shown on a fixed resistor.

..... [1]

Section B

Answer **one** question from this section.

9 **(a)** Fig. 3 shows scaffolding on the outside of a building.

Fig. 3

(i) State the type of structure used in scaffolding.

..... [1]

(ii) Identify **two** safety features of the scaffolding that have been added to protect the public and workers using the scaffolding.

1 .....

2 .....
[2]

(iii) State the reason for using triangulation in a scaffolding structure.

..... [1]

(iv) Describe the difference between a strut and a tie in a structure.

.....

.....

..... [2]

(v) The lower part of a vertical scaffold pole is shown in Fig. 4.

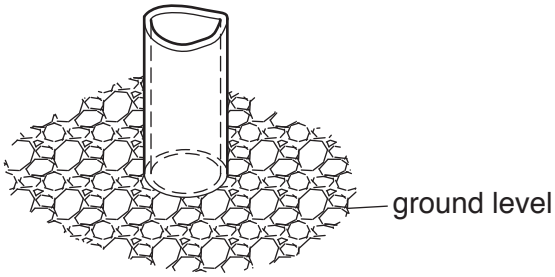

Fig. 4

Use sketches and notes to show how the vertical load from the scaffold pole to the ground can be spread over a greater area.

[3]

(b) Fig. 5 shows a concrete barrier built across a disused dock to hold back sea water.

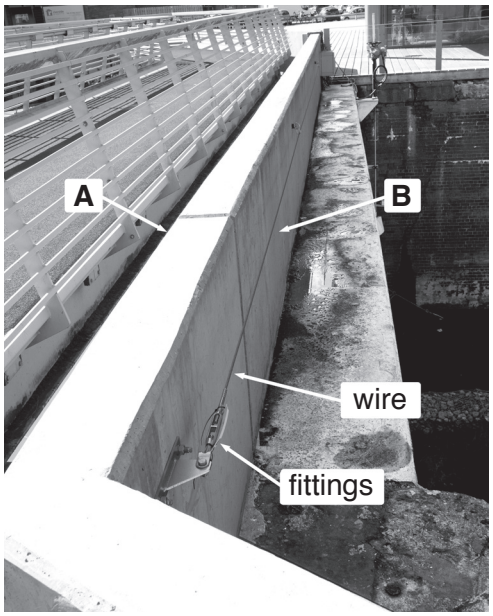

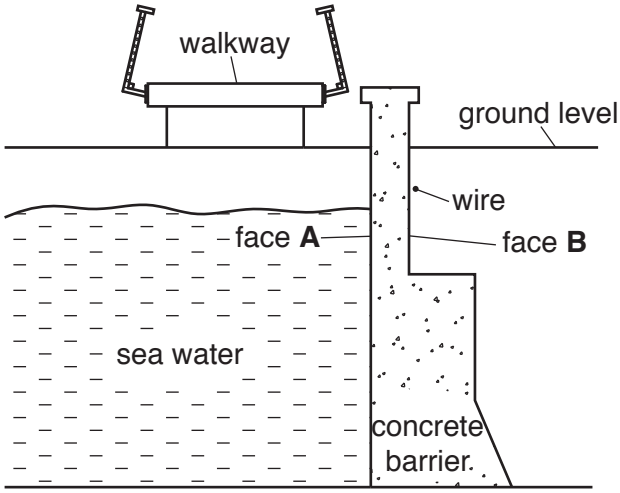

Fig. 5

(i) State the force that will be acting on face **A**, the sea water side, and face **B**, the disused dock side of the barrier.

Force at **A** .....

Force at **B** .....
[2]

(ii) Give **one** reason why stainless steel would be more suitable than mild steel for the wire and fittings.

..... [1]

(iii) Movement in the wall can be monitored by using a strain gauge.
Describe the method of fixing a strain gauge to the wall.

.....

.....

..... [2]

(c) Fig. 6 shows a design idea for a barrow for moving heavy building materials.
Two methods of cutting the square steel tube to form a corner joint are shown.

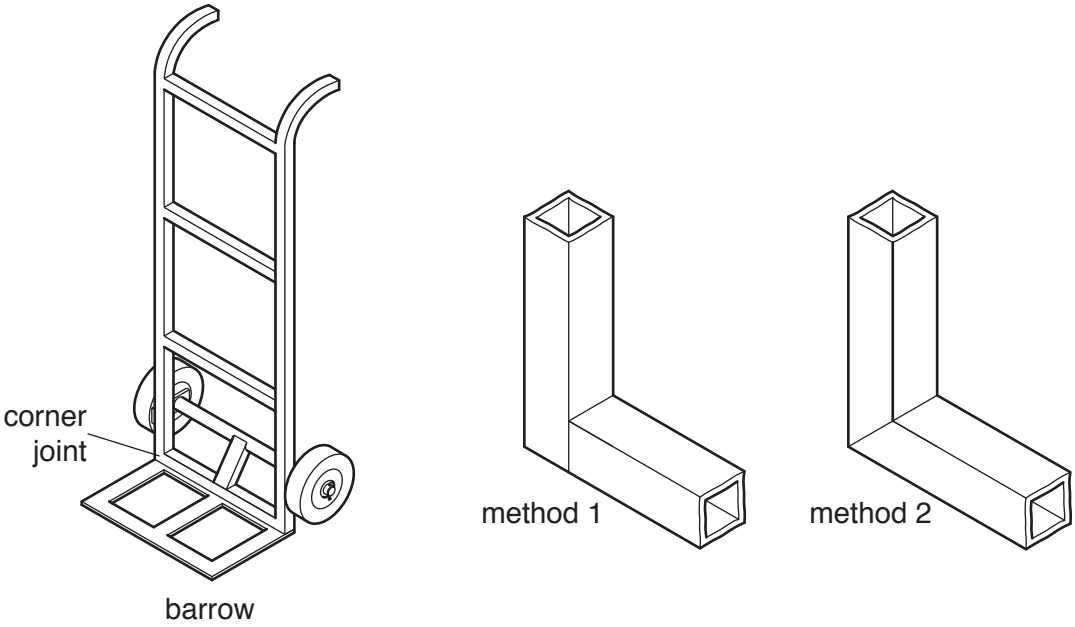

Fig. 6

(i) Give **one** benefit of each method of cutting the tube ready for joining.

Method 1 .....

Method 2 .....
[2]

(ii) Describe how the tubes in method 1 could be joined together.

.....

.....

..... [2]

(iii) Use sketches and notes to show how a gusset plate could be fitted to the corner joint.

[2]

(iv) Fig. 7 shows two views of the barrow with a load in place.

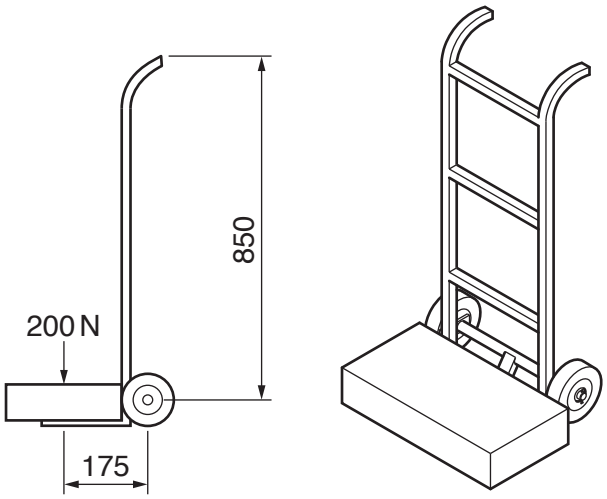

Fig. 7

Calculate the effort needed to pull back on the handles and lift the load.

.....

.....

..... [3]

(v) Explain why the effort needed will reduce as the handles are pulled back.

.....

.....

..... [2]

10 Fig. 8 shows an arrangement of gears driven by a small electric motor.

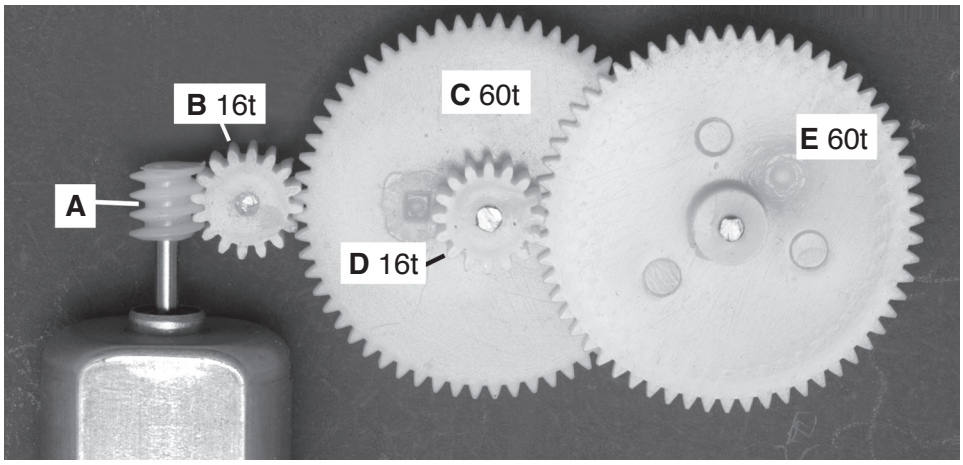

Fig. 8

(a) **(i)** State the name of gear **A**.

..... [1]

(ii) Give **two** reasons for using this type of gear.

1 .....

2 .....
[2]

(iii) Gear **B** is an idler gear.
Give **two** reasons for using an idler gear.

1 .....

2 .....
[2]

(iv) Calculate the gear ratio between the driver gear **A** and the driven gear **E**.

.....

.....

.....

..... [3]

(v) The gears are all made from nylon.
State **two** properties of nylon that make it suitable for use in small gear systems.

1 .....

2 .....
[2]

(b) Fig. 9 shows a chain and sprocket drive.

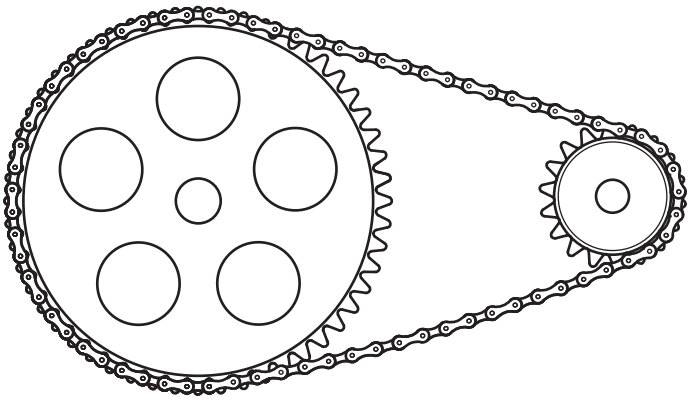

Fig. 9

Use sketches and notes to show **one** method of adjusting the tension on the chain.

[3]

(c) Mechanisms can be powered in a number of ways.

(i) State **one** safety precaution for each of the power sources given below.

Electricity

.....

Natural gas

.....

Steam

.....

Compressed air

.....

[4]

(ii) Describe the problems associated with the storage of electrical energy.

.....

.....

.....

..... [3]

(iii) Explain how electronics and compressed air can be combined in a pneumatic system.

.....

.....

.....

..... [3]

(d) Fig. 10 shows a gravity feed oil reservoir fitted on a steam engine.
The lubricating oil in the reservoir falls onto the shaft and bearings below.

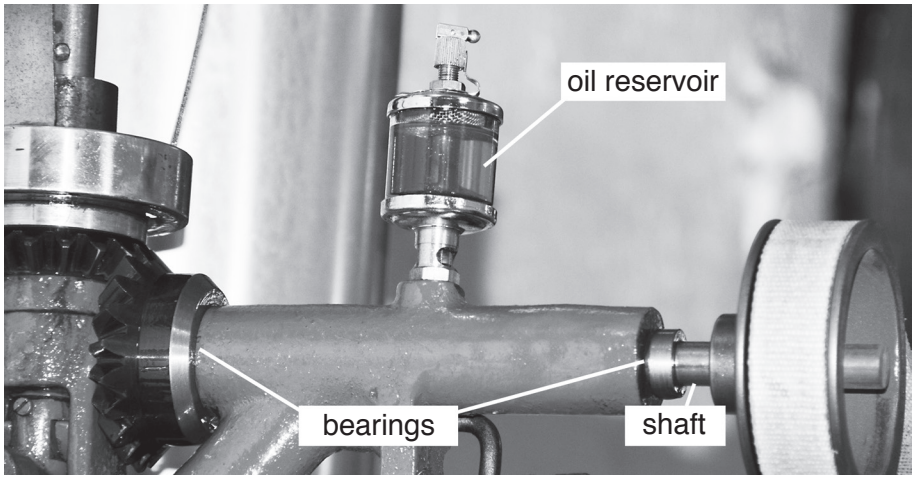

Fig. 10

Give **two** drawbacks of a gravity feed oil reservoir.

1 .....

2 .....
[2]

11 **(a)** Fig. 11 shows equipment used during the soldering process.

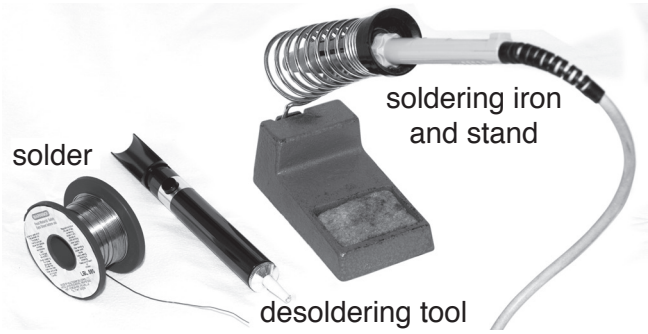

Fig. 11

(i) Describe how the soldering iron should be prepared before it is used.

.....

.....

..... [2]

(ii) The desoldering tool is used when a component has to be removed from a circuit. Describe the process of removing a soldered wire from a circuit board.

.....

.....

..... [2]

(iii) Fig. 12 shows a seven segment display that is made up of LEDs which can carry a maximum current of 15 mA. The voltage drop across each LED is 1.8 V.

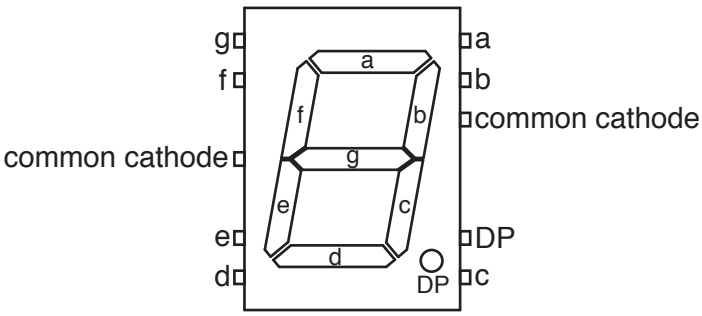

Fig. 12

Calculate the value for a protective resistor for each segment if the supply voltage is 9 V.

.....

.....

.....

..... [3]

(iv) A list of available resistors is shown below.
Circle the value of resistor that should be used.

390 Ω **470 Ω** **560 Ω** **680 Ω** **820 Ω** [1]

(v) Complete the table with voltage levels for all of the connections to the display when the number '5' is shown.
Use '1' to represent the supply voltage and '0' to represent 0 V.

segment	voltage level
a	
b	
c	
d	
e	
f	
g	
DP	
common cathode	

[3]

(vi) Fig. 13 shows two methods of protecting the LEDs in the display segments.

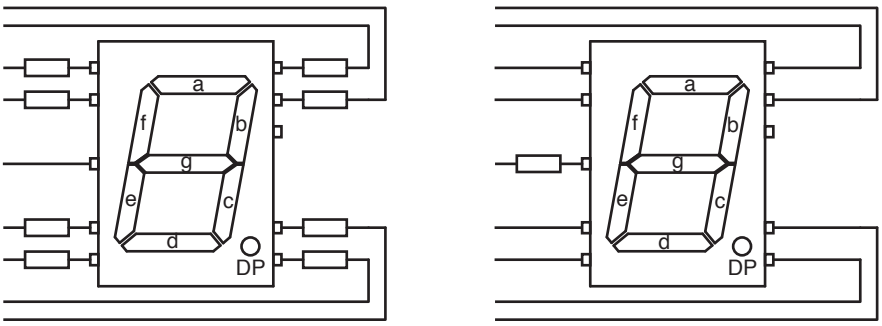

method **A** method **B**

Fig. 13

Explain why method **A** is better than method **B**.

.....

.....

..... [2]

(b) A burglar alarm system has two sensors, both using reed switches.

(i) Describe how a reed switch works.

.....

.....

..... [2]

(ii) Fig. 14 shows a logic circuit used to give a logic 1 signal when one or both reed switches are opened.

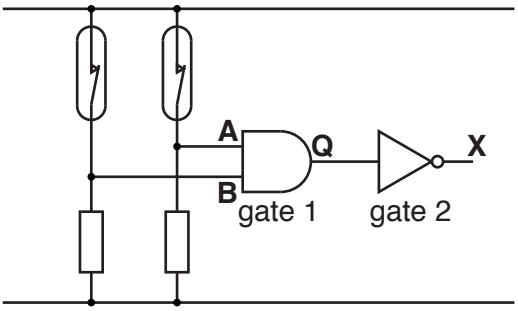

A	B	Q	X
0	0		
0	1		
1	0		
1	1		

Fig. 14

Complete the truth table for the logic circuit. [2]

(iii) Draw the symbol for a single logic gate with the same function as gate 1 and gate 2 combined.

[1]

(c) The output from the circuit in Fig. 14 will go to a transistor connected to a relay coil.

(i) Complete the connections for this on Fig. 15.

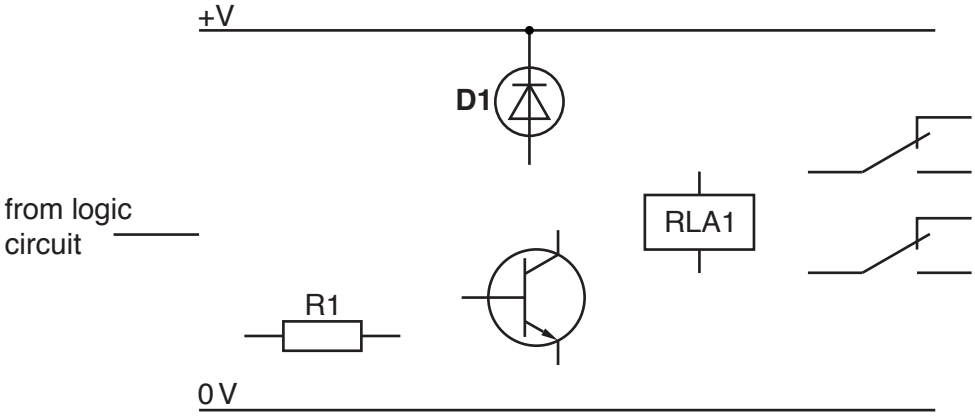

Fig. 15

[3]

(ii) Explain why component **D1** is necessary in the circuit.

.....

.....

..... [2]

(iii) The relay has double pole double throw (DPDT) switch terminals.
Describe the operation of the switch.

Double pole .....

.....

.....

Double throw .....

.....

.....
[2]

BLANK PAGE

BLANK PAGE

BLANK PAGE

Permission to reproduce items where third-party owned material protected by copyright is included has been sought and cleared where possible. Every reasonable effort has been made by the publisher (UCLES) to trace copyright holders, but if any items requiring clearance have unwittingly been included, the publisher will be pleased to make amends at the earliest possible opportunity.

To avoid the issue of disclosure of answer-related information to candidates, all copyright acknowledgements are reproduced online in the Cambridge Assessment International Education Copyright Acknowledgements Booklet. This is produced for each series of examinations and is freely available to download at www.cambridgeinternational.org after the live examination series.

Cambridge Assessment International Education is part of the Cambridge Assessment Group. Cambridge Assessment is the brand name of the University of Cambridge Local Examinations Syndicate (UCLES), which itself is a department of the University of Cambridge.

© UCLES 2019